6 Axis Force Torque Sensor

RFT Series User Manual

Revision 1.82

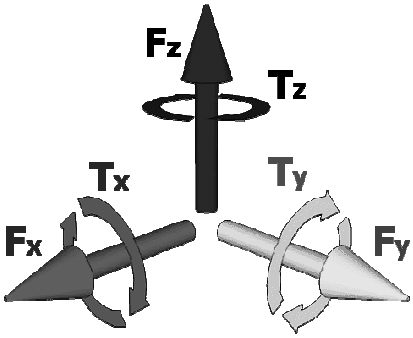

ROBOTOUS Co., Ltd.

Contents

1. Caution 4

1.1. Notices 4

1.2. Warning 4

2. Installation 5

2.1. Overview 5

2.2. Power Supply Specifications 6

2.3. Wiring 6

3. Operation 8

3.1. Interfaces 8

3.2. Communication Concept 8

3.3. Basic Operation 8

3.4. Default Setting of Communication 9

3.5. Packet Structure 10

3.5.1. Packet Structure of CAN Interface 10

3.5.2. Packet Structure of UART & EtherNET interfaces 10

3.6. Packet Definition 11

3.6.1. Summary of command packets 11

3.6.2. Read Model Name 12

3.6.3. Read Serial Number 12

3.6.4. Read Firmware Version 12

3.6.5. Set Communication ID & IP (for CAN & Ethernet only) 13

3.6.6. Read Communication ID & IP (for CAN & Ethernet only) 13

3.6.7. Set Baud-rate (for UART only) 14

3.6.8. Read Baud-rate 15

3.6.9. Set Filter 15

3.6.10. Read Filter Setting 16

3.6.11. Read F/T Data (once) 16

3.6.12. Start F/T Data Output 18

3.6.13. Stop F/T Data Output 18
3.6.14. Set Data Output Rate 18
3.6.15. Read Data Output Rate 19
3.6.16. Allowable Data Output Rate 19
3.6.17. Set Bias 20
3.6.18. Read Count of Overload Occurrence 20
3.6.19. Error Codes 21
3.7. C Sample Code for Force & Torque Conversion 21
3.7.1. CAN Interface 21
3.7.2. UART & Ethernet Interface 22
4. Product Specification 23
4.1. Performance specifications 23
4.2. Data output interface 23
5. Product Ordering Information 24
6. Contact Information (Technical Support) 25
7. APPENDIX: Dimensions of RFT Series 25

1. Caution

1.1. Notices

- ⚠ Users must read and fully understand all instructions in this manual prior to installing or operating the RFT Series Force/Torque sensor. This manual covers installation, operation, specifications, and ordering information.

1.2. Warning

- ⚠ Do not install or operate a damaged or incomplete sensor.
- ⚠ Do not disassemble or attempt to repair the sensor under any circumstances.
- ⚠ Always consider the applied payload to ensure safe operation.
- ⚠ Do not exceed the specified force/torque limits. Exceeding limits may result in inaccurate measurements and permanent damage.
- ⚠ Avoid sudden changes in temperature and humidity, as this may degrade compensation performance.
- ⚠ Do not remove or damage product labels; doing so will void the warranty.

2. Installation

2.1. Overview

The RFT Series is a capacitive-type 6-axis force/torque sensor that detects deformation-induced capacitance changes. It offers high durability, low drift, and strong immunity to electrical noise. The sensor integrates signal processing and supports multiple communication interfaces.

Item	RFT80-6A03	RFT80-6A02	RFT80-6A01	RFT64-6A01
Product Image			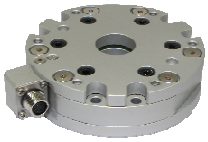	
Hollow Core			●	
Dust Seal				
Temp. Compensation	●	●		●

Item	RFT64-SB01	RFT60-HA01	RFT44-SB01	RFT40-SA01
Product Image	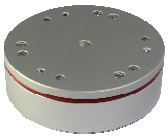	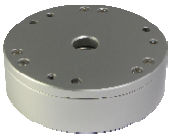	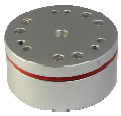	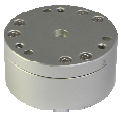
Hollow Core		●		
Dust Seal	●		●	
Temp. Compensation				

Capacitive Type
Sensing capacitance variation by structural deformation

Reliable Performance
Immunity to electrical noise, robust calibration, no sensor drift

High Durability
Mechanical overload protection, no adhesive

Easy Installation All-in-one device with embedded signal processing, interface software support

Low Cost
Simple structure, simplified fabrication process

Various Output Options
CAN, RS232, RS422, RS485, USB, EtherCAT, and Ethernet

2.2. Power Supply Specifications

Parameter	Value / Range
Input Voltage	5V DC (±10%)
Maximum Power Consumption	0.5W
Caution	*Exceeding the specified voltage range may cause permanent damage*

2.3. Wiring

- **General notices**
  - ▶ Verify correct mapping between wire color and function before connection.
  - ▶ A 120Ω termination resistor is required for CAN and RS-422 communication.
  - ▶ The shield line is internally connected to GND; external grounding is not required.
  - ▶ For RS-232 communication, connect TX to RX and RX to TX between devices.

- **RFT80-6A03 | RFT80-6A02 | RFT80-6A01**

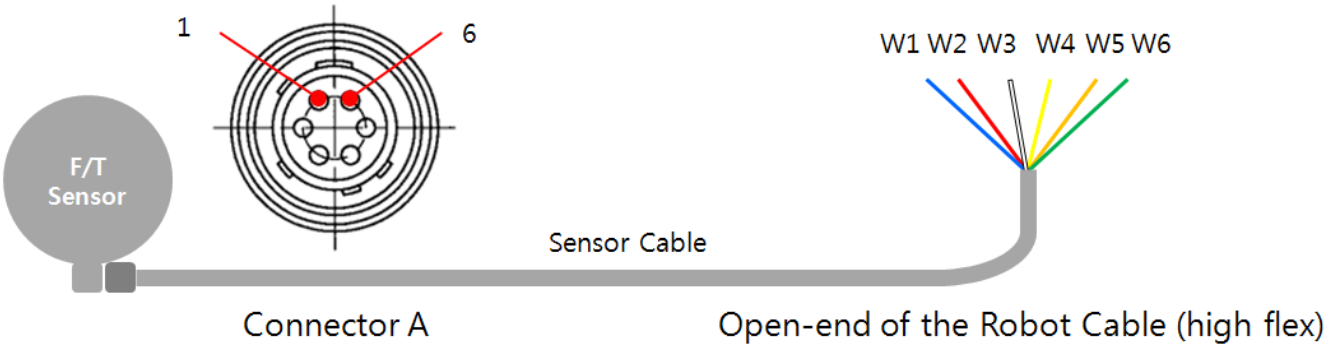

Connector A (Sensor Side)					
Pin No.	Signal				Color
	CAN	**RS232**	**RS422**	**USB**	
1	GND	GND	GND	GND	Blue
2	VCC	VCC	VCC	VCC	Red
3	C_H	TX	TX+	D-	White
4	C_L	RX	TX-	D+	Yellow
5	-	-	RX-	-	Orange
6	-	-	RX+	-	Green

Cable End (Host Side)					
Pin No.	Color	Signal			
		CAN	**RS232**	**RS422**	**USB**
W1	Blue	GND	GND	GND	GND
W2	Red	VCC	VCC	VCC	VCC
W3	White	C_H	TX	TX+	D-
W4	Yellow	C_L	RX	TX-	D+
W5	Orange	-	-	RX-	-
W6	Green	-	-	RX+	-

- **RFT64-6A01 | RFT64-SB01 | RFT60-HA01 | RFT44-SB01 | RFT40-SA01**

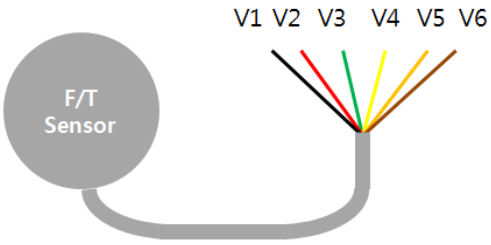

Open-end of the Standard Cable

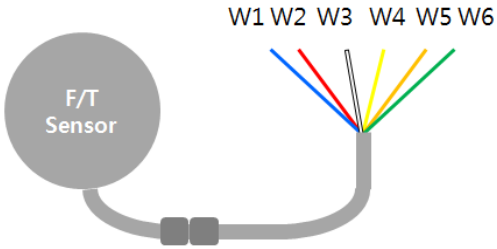

Open-end of the Robot Cable (high flex)

Cable End (Host Side)					
Pin No.	Color	Signal			
		CAN	**RS232**	**RS422**	**USB**
V1	Black	GND	GND	GND	GND
V2	Red	VCC	VCC	VCC	VCC
V3	Green	C_H	TX	TX+	D-
V4	Yellow	C_L	RX	TX-	D+
V5	Orange	-	-	RX-	-
V6	Brown	-	-	RX+	-

Cable End (Host Side)					
Pin No.	Color	Signal			
		CAN	**RS232**	**RS422**	**USB**
W1	Blue	GND	GND	GND	GND
W2	Red	VCC	VCC	VCC	VCC
W3	White	C_H	TX	TX+	D-
W4	Yellow	C_L	RX	TX-	D+
W5	Orange	-	-	RX-	-
W6	Green	-	-	RX+	-

3. Operation

3.1. Interfaces

- **Supported interfaces:**
  - CAN, RS-232, RS-422, RS-485, USB (Virtual COM), EtherCAT, Ethernet (UDP/TCP)

3.2. Communication Concept

The system operates using command and response packets. Command packets configure the sensor and request data, while response packets contain processed results. Packet size varies by interface.

3.3. Basic Operation

- **Key Notes**
  - Initialization: To begin receiving force and torque (F/T) data, the user must explicitly send the "Start F/T Data Output" command. The sensor remains in an Idle state upon power-up until this command is received.
  - Parameter settings are retained after reboot
  - The following commands are not saved and must be re-executed after a reboot:
    - Start/Stop F/T Data Output
    - Set Bias
  - During Active Measurement, only "Stop F/T Data Output" and "Set Bias" commands are executable.
    - All other configuration commands are available only when the sensor is Idle or after a "Stop F/T Data Output" command has been processed.

- **Operational Procedures**
  - Measuring F/T Data (Default Settings)
    - Initiate Output: Send the "Start F/T Data Output" command [Command ID: 11 (0x0B)].
    - Data Acquisition: Begin receiving the F/T data stream from the sensor.
  - Measuring F/T Data (Custom Parameter Settings)
    - Configure Parameters: Send the desired parameter setting command (refer to Section 3.6: Packet Definition).

- Verify Response: Receive the response packet and confirm there are no processing errors.
- Initiate Output: Send the "Start F/T Data Output" command.
- Data Acquisition: Begin receiving the F/T data stream.

▶ Modifying Parameters During Active Measurement

- Halt Output: Send the "Stop F/T Data Output" command [Command ID: 12 (0x0C)] to enter the Idle state.
- Update Parameters: Send the new parameter configuration command.
- Verify Response: Confirm the command was processed successfully via the response packet.
- Resume Output: Send the "Start F/T Data Output" command.
- Data Acquisition: Resume receiving the updated F/T data stream.

▶ Applying Bias During Active Measurement

- Ensure Active Output: Confirm the sensor is in the "Start F/T Data Output" state.
- Execute Bias: Send the "Set Bias" command [Command ID: 17 (0x11)].
- Data Acquisition: Continue receiving F/T data with the bias applied.

3.4. Default Setting of Communication

Parameter	CAN	UART	Ethernet
Filter Status	Disabled(OFF)	Disabled(OFF)	Disabled(OFF)
Output Rate	200Hz	200Hz	200Hz
Connection Details	Receiver ID: 100(0x64) TX ID #1: 1(0x01) TX ID #2: 2(0x02)	N/A	Static IP (Port): Sensor: 192.168.0.200 (311)
Specifications	• Protocol: CAN 2.0A/B • Identifier: Standard • Baud Rate: 1 Mbps • Payload: 8 Bytes	• Baud Rate: 115,200 bps • Data Bits: 8 bits • Parity: None • Stop Bit: 1 bit • Flow Control: None	• Mode: UDP Asynchronous

3.5. Packet Structure

3.5.1. Packet Structure of CAN Interface

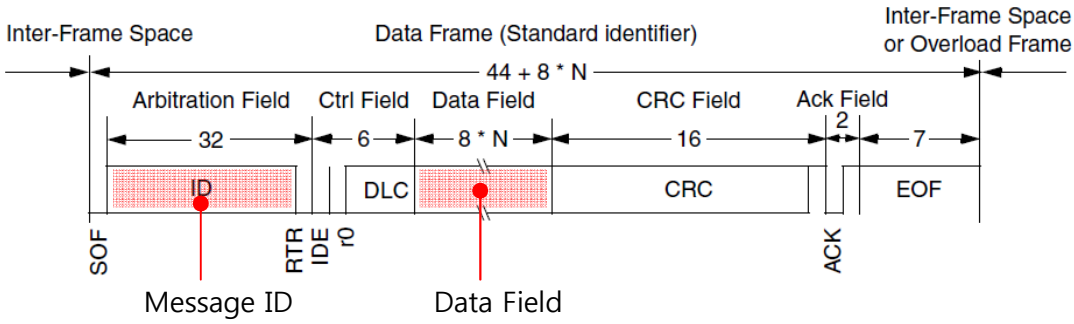

- The message structure of a standard CAN communication is shown in the figure above.
  - Maximum data field size of a CAN packet is 8 bytes.
- The F/T sensor uses the arbitration field (message ID) and data field of CAN packet.
- The command packet needs a message ID to send 1 byte command to the sensor.
  - Receiver ID of CAN communication is a message ID for receiving commands.
  - The default receiver ID is 100 (0x64).
  - Refer to Section 3.6 Packet Definition for more information.
- The response packet needs 2 message IDs to receive 16 bytes data from the sensor. In other words, it is made of two sequential CAN packets.
  - Transmitter ID #1 and transmitter ID #2 are message IDs for the two sequential CAN packets, respectively.
  - The default transmitter ID #1 is 1(0x01).
  - The default transmitter ID #2 is 2(0x02).
  - 8 bytes data in a CAN packet with transmitter ID #1 occupies Data 1 - Data 8 of the response packet data field.
  - 8 bytes data in a CAN packet with transmitter ID #2 occupies Data 9 - Data 16 of the response packet data field.

3.5.2. Packet Structure of UART & EtherNET interfaces

- Command Packet Structure

SOP	Data Field			Checksum	EOP
	Data 1	. . .	Data 8		
85(0x55)	Command Data Field				170(0xAA)

- Response Packet Structure

SOP	Data Field			Checksum	EOP
	Data 1	. . .	Data 16		

85(0x55)	Response Data Field		170(0xAA)

- RS-232, RS-422, USB and Ethernet interfaces utilizes Serial communication.
- Serial packet structure consists of SOP (Start Of Packet), Data Field, Checksum and EOP (End Of Packet)
  - The size of SOP field is 1 byte, it is fixed to 85(0x55).
  - The size of EOP field is 1 byte, it is fixed to 170(0xAA).
  - The data field of the command packet has 8 bytes length.
  - The data field of the response packet has 16 bytes length.
  - The size of the checksum field is 1 byte, the checksum value is summation of each data in data field.

3.6. Packet Definition

3.6.1. Summary of command packets

Command	Command ID	No. of Parameters	w/ Response Packet	Remarks
Read Model Name	1(0x01)	0	Yes	
Read Serial Number	2(0x02)	0	Yes	
Read Firmware Version	3(0x03)	0	Yes	
Set Communication ID/IP	4(0x04)	3	Yes	CAN & Ethernet only
Read Communication ID/IP	5(0x05)	0	Yes	CAN & Ethernet only
Set Baud-rate	6(0x06)	1	Yes	UART only
Read Baud-rate	7(0x07)	0	Yes	
Set Filter	8(0x08)	2	Yes	
Read Filter Setting	9(0x09)	0	Yes	
Read F/T data (once)	10(0x0A)	0	Yes	
Start F/T Data Output	11(0x0B)	0	Yes	
Stop F/T Data Output	12(0x0C)	0	No	Available even during data output
Reserved	13(0x0D)	N.A.	N.A.	
Reserved	14(0x0E)	N.A.	N.A.	
Set Data Output Rate	15(0x0F)	1	Yes	
Read Data Output Rate	16(0x10)	0	Yes	
Set Bias	17(0x11)	1	No	Available even during data output
Read Count of Overload Occurrence	18(0x12)	0	Yes	

3.6.2. **Read Model Name**

▶ Data field of command packet(8byte) (XX : Don't care)

Data Field							
D1	D2	D3	D4	D5	D6	D7	D8
ID	XX	XX	XX	XX	XX	XX	XX

- ID : Command ID = 1(0x01)

▶ Data field of response packet(16byte) (XX : Don't care)

Data Field															
D1	D2	D3	D4	D5	D6	D7	D8	D9	D10	D11	D12	D13	D14	D15	D16
ID	R1	R2	R3	R4	R5	R6	R7	R8	R9	R10	R11	R12	R13	R14	R15

- ID : Response ID = 1(0x01) <same as command ID>
- R1 ~ R15 : Model name in ASCII code

3.6.3. **Read Serial Number**

▶ Data field of command packet(8byte) (XX : Don't care)

Data Field							
D1	D2	D3	D4	D5	D6	D7	D8
ID	XX	XX	XX	XX	XX	XX	XX

- ID : Command ID = 2(0x02)

▶ Data field of response packet(16byte) (XX : Don't care)

Data Field															
D1	D2	D3	D4	D5	D6	D7	D8	D9	D10	D11	D12	D13	D14	D15	D16
ID	R1	R2	R3	R4	R5	R6	R7	R8	R9	R10	R11	R12	R13	R14	R15

- ID : Response ID = 2(0x02) <same as command ID>
- R1 ~ R15 : S/N in ASCII code

3.6.4. **Read Firmware Version**

▶ Data field of command packet(8byte) (XX : Don't care)

Data Field							
D1	D2	D3	D4	D5	D6	D7	D8
ID	XX	XX	XX	XX	XX	XX	XX

- ID : Command ID = 3(0x03)

▶ Data field of response packet(16byte) (XX : Don't care)

Data Field															
D1	D2	D3	D4	D5	D6	D7	D8	D9	D10	D11	D12	D13	D14	D15	D16
ID	R1	R2	R3	R4	R5	R6	R7	R8	R9	R10	R11	R12	R13	R14	R15

- ID : Response ID = 3(0x03) <same as command ID>
- R1 ~ R15 : Firmware Version in ASCII code

3.6.5. **Set Communication ID & IP (for CAN & Ethernet only)**

▶ CAN data field of command packet(8byte) (XX : Don't care)

Data Field							
D1	D2	D3	D4	D5	D6	D7	D8
ID	Receiver ID	Transmitter ID#1	Transmitter ID#2	XX	XX	XX	XX

- ID : Command ID = 4(0x04)
- Receiver ID: ID of Force/Torque sensor
- Transmitter ID #1: the first message ID for transmitting two sequential messages
- Transmitter ID #2: the second message ID for transmitting two sequential messages
- Allowable range of ID: 1(0x01) ~ 255(0xFF)
- Note that Receiver/transmitter IDs must differ from each other.
-

▶ Ethernet data field of command packet(8byte) (XX : Don't care)

Data Field							
D1	D2	D3	D4	D5	D6	D7	D8
ID	IP#1	IP#2	IP#3	IP#4	Num#1	Num#2	XX

- ID : Command ID = 4(0x04)
- IP#1 ~ IP#4 : New sensor IP address to be set
- Num#1 ~ Num#2 : New sensor port number to be set

▶ CAN & Ethernet data field of response packet(16byte) (XX : Don't care)

Data Field															
D1	D2	D3	D4	D5	D6	D7	D8	D9	D10	D11	D12	D13	D14	D15	D16
ID	R1	R2	XX	XX	XX	XX	XX	XX	XX	XX	XX	XX	XX	XX	XX

- ID : Response ID = 4(0x04) <same as command ID>
- R1 : Result of command processing [1(0x01) : success, 0(0x00) : failure]
- R2 : Refer to Section 3.6.19 Error Codes
-

3.6.6. **Read Communication ID & IP (for CAN & Ethernet only)**

▶ Data field of command packet(8byte) (XX : Don't care)

Data Field							
D1	D2	D3	D4	D5	D6	D7	D8
ID	XX	XX	XX	XX	XX	XX	XX

- ID : Command ID = 5(0x05)

▶ CAN data field of response packet(16byte) (XX : Don't care)

Data Field															
D1	D2	D3	D4	D5	D6	D7	D8	D9	D10	D11	D12	D13	D14	D15	D16
ID	R1	R2	R3	R4	R5	R6	XX	XX	XX	XX	XX	XX	XX	XX	XX

- ID : Response ID = 5(0x05) <same as command ID>

- R1 : Current receiver ID
- R2 : Current transmitter ID #1
- R3 : Current transmitter ID #2
- R4 : Receiver ID to set
- R5 : Transmitter ID #1 to set
- R6 : Transmitting ID #2 to set
- Note that new receiver/transmitter IDs(R4~R6) are applied at next reboot of the sensor

▶ Ethernet data field of response packet(16byte) (XX : Don't care)

Data Field															
D1	D2	D3	D4	D5	D6	D7	D8	D9	D10	D11	D12	D13	D14	D15	D16
ID	R1	R2	R3	R4	R5	R6	R7	R8	R9	R10	R11	R12	XX	XX	XX

- ID : Response ID = 5(0x05), same as the command ID
- R1 ~ R4 : Current sensor IP address
- R4 ~ R6 : Current sensor port number
- R7 ~ R10 : New sensor IP address to be set
- R11 ~ R12 : New sensor port number to be set
- Note the new IP address and port number (R7~R12) will be applied after the next reboot

3.6.7. **Set Baud-rate (for UART only)**

▶ Data field of command packet(8byte) (XX : Don't care)

Data Field							
D1	D2	D3	D4	D5	D6	D7	D8
ID	Baud-rate parameter	XX	XX	XX	XX	XX	XX

- ID : Command ID = 6(0x06)
- Baud-rate parameter for UART: 115,200 bps, Default 0(0x00)

Baud-rate parameter	Baud-rate (bps)
0(0x00)	115,200
1(0x01)	921,600
2(0x02)	460,800
3(0x03)	230,400
4(0x04)	115,200
5(0x05)	57,600

▶ Data field of response packet(16byte) (XX : Don't care)

Data Field															
D1	D2	D3	D4	D5	D6	D7	D8	D9	D10	D11	D12	D13	D14	D15	D16
ID	R1	R2	XX	XX	XX	XX	XX	XX	XX	XX	XX	XX	XX	XX	XX

- ID : Response ID = 6(0x06) <same as command ID>
- R1 : Result of command processing [1(0x01) : success, 0(0x00) : failure]
- R2 : Refer to Section 3.6.19 Error Codes
- Note that baud-rate is related to available data output rates.

- Refer to Section 3.6.16 Allowable Data Output Rate

3.6.8. **Read Baud-rate**

▶ Data field of command packet(8byte) (XX : Don't care)

Data Field							
D1	D2	D3	D4	D5	D6	D7	D8
ID	XX	XX	XX	XX	XX	XX	XX

- ID : Command ID = 7(0x07)

▶ Data field of response packet(16byte) (XX : Don't care)

Data Field															
D1	D2	D3	D4	D5	D6	D7	D8	D9	D10	D11	D12	D13	D14	D15	D16
ID	R1	R2	XX	XX	XX	XX	XX	XX	XX	XX	XX	XX	XX	XX	XX

- ID : Response ID = 7(0x07) <same as command ID>
- R1 : Current baud-rate
- R2 : Baud-rate to set at next reboot of sensor

3.6.9. **Set Filter**

▶ Data field of command packet(8byte) (XX : Don't care)

Data Field							
D1	D2	D3	D4	D5	D6	D7	D8
ID	Filter Type	Filter Parameter	XX	XX	XX	XX	XX

- ID : Command ID = 8(0x08)
- Filter Type: 0(No filter), 1(1st order low-pass filter)
- Filter Parameter

Filter Type	Filter Parameter	Cutoff Frequency [Hz]
0(0x00)	0(0x00)	No filter
1(0x01)	0(0x00)	No filter
1(0x01)	1(0x01)	500
1(0x01)	2(0x02)	300
1(0x01)	3(0x03)	200
1(0x01)	4(0x04)	150
1(0x01)	5(0x05)	100
1(0x01)	6(0x06)	50
1(0x01)	7(0x07)	40
1(0x01)	8(0x08)	30
1(0x01)	9(0x09)	20
1(0x01)	10(0x0A)	10
1(0x01)	11(0x0B)	5
1(0x01)	12(0x0C)	3
1(0x01)	13(0x0D)	2
1(0x01)	14(0x0E)	1

▶ Data field of response packet(16byte) (XX : Don't care)

Data Field															
D1	D2	D3	D4	D5	D6	D7	D8	D9	D10	D11	D12	D13	D14	D15	D16
ID	R1	R2	XX	XX	XX	XX	XX	XX	XX	XX	XX	XX	XX	XX	XX

- ID : Response ID = 8(0x08) <same as command ID>
- R1 : Result of command processing [1(0x01) : success, 0(0x00): failure]
- R2 : refer to Section 3.6.19 Error Codes

3.6.10. **Read Filter Setting**

▶ Data field of command packet(8byte) (XX : Don't care)

Data Field							
D1	D2	D3	D4	D5	D6	D7	D8
ID	XX	XX	XX	XX	XX	XX	XX

- ID : Command ID = 9(0x09)

▶ Data field of response packet(16byte) (XX : Don't care)

Data Field															
D1	D2	D3	D4	D5	D6	D7	D8	D9	D10	D11	D12	D13	D14	D15	D16
ID	R1	R2	XX	XX	XX	XX	XX	XX	XX	XX	XX	XX	XX	XX	XX

- ID : Response ID = 9(0x09) <same as command ID>
- R1 : Filter type
- R2 : Filter parameter

3.6.11. **Read F/T Data (once)**

▶ Data field of command packet(8byte) (XX : Don't care)

Data Field							
D1	D2	D3	D4	D5	D6	D7	D8
ID	XX	XX	XX	XX	XX	XX	XX

- ID : Command ID = 10(0x0A)

▶ Data field of response packet(16byte) (XX : Don't care)

Data Field															
D1	D2	D3	D4	D5	D6	D7	D8	D9	D10	D11	D12	D13	D14	D15	D16
ID	R1	R2	R3	R4	R5	R6	R7	R8	R9	R10	R11	R12	R13	XX	XX

- ID : Response ID = 10(0x0A) <same as command ID>
- R1 ~ R12 : Each value of the force and torque is composed of 2byte(signed short)
- R1 : Fx's upper byte, R2 : Fx's lower byte
- R3 : Fy's upper byte, R4 : Fy's lower byte
- R5 : Fz's upper byte, R6 : Fz's lower byte
- R7 : Tx's upper byte, R8 : Tx's lower byte
- R9 : Ty's upper byte, R10 : Ty's lower byte

- R11 : Tz's upper byte, R12: Tz's lower byte

- How to convert to force and torque values

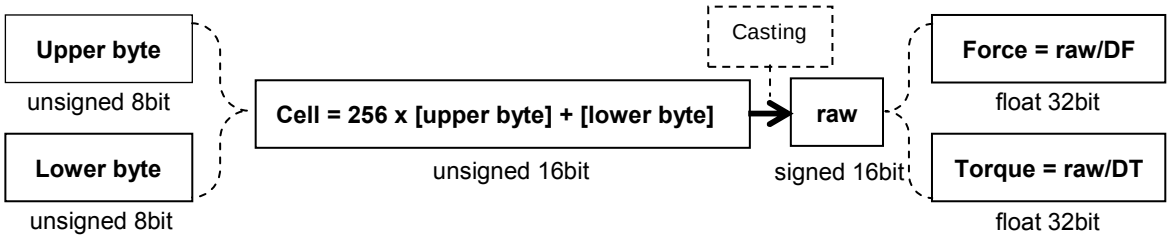

- R13 : Status of Overload

Status of Overload							
Bit7	Bit6	Bit5 (Fx)	Bit4 (Fy)	Bit3 (Fz)	Bit2 (Tx)	Bit1 (Ty)	Bit0 (Tz)
Reserved	Reserved	0/1	0/1	0/1	0/1	0/1	0/1

- If each components of force and torque exceed its rated load capacity by more than 20%, the corresponding bit is set to 1, and reset to 0 if not.

- Divider DF, DT

Divider		
Model	DF	DT
RFT80-6A03	25	500
RFT80-6A02	50	1000
RFT80-6A01	50	1000
RFT64-6A01	50	1000
RFT64-SB01	50	2000
RFT60-HA01	50	2000
RFT44-SB01	50	2000
RFT40-SA01	50	2000

3.6.12. **Start F/T Data Output**

▶ Data field of command packet(8byte) (XX : Don't care)

Data Field							
D1	D2	D3	D4	D5	D6	D7	D8
ID	XX	XX	XX	XX	XX	XX	XX

- ID : Command ID = 11(0x0B)

▶ Data field of response packet(16byte) (XX : Don't care)

Data Field															
D1	D2	D3	D4	D5	D6	D7	D8	D9	D10	D11	D12	D13	D14	D15	D16
ID	R1	R2	R3	R4	R5	R6	R7	R8	R9	R10	R11	R12	R13	XX	XX

- ID : Response ID = 11(0x0B) <same as command ID>
- R1 ~ R12 : Each components of force & torque are composed of 2 parameters as follows:
- R1 : Fx's upper byte, R2 : Fx's lower byte
- R3 : Fy's upper byte, R4 : Fy's lower byte
- R5 : Fz's upper byte, R6 : Fz's lower byte
- R7 : Tx's upper byte, R8 : Tx's lower byte
- R9 : Ty's upper byte, R10 : Ty's lower byte
- R11 : Tz's upper byte, R12: Tz's lower byte
- Refer to Section 3.6.11.Read F/T Data to get real force & torque values.
- R13 : Status of Overload, refer to Section 3.6.11.

3.6.13. **Stop F/T Data Output**

▶ Data field of command packet(8byte) (XX : Don't care)

Data Field							
D1	D2	D3	D4	D5	D6	D7	D8
ID	XX	XX	XX	XX	XX	XX	XX

- ID : Command ID = 12(0x0C)

▶ Data field of response packet

- This command is not followed by any response packet.

3.6.14. **Set Data Output Rate**

▶ Data field of command packet(8byte) (XX : Don't care)

Data Field							
D1	D2	D3	D4	D5	D6	D7	D8
ID	Output Rate Parameter	XX	XX	XX	XX	XX	XX

- ID : Command ID = 15(0x0F)
- Output Rate Parameter: 0 (200Hz, default)
- Refer to Section 3.6.16 Allowable Data Output Rate

▶ Data field of response packet(16byte) (XX : Don't care)

Data Field															
D1	D2	D3	D4	D5	D6	D7	D8	D9	D10	D11	D12	D13	D14	D15	D16
ID	R1	R2	XX	XX	XX	XX	XX	XX	XX	XX	XX	XX	XX	XX	XX

- ID : Response ID = 15(0x0F) <same as command ID>
- R1 : Result of command processing [1(0x01): success, 0(0x00): failure]
- R2 : Refer to Section 3.6.19 Error Code for error code
- High data output rate may not work at a low baud-rate.
- Please refer to Section 3.6.16 Allowable Data Output Rate

3.6.15. **Read Data Output Rate**

▶ Data field of command packet(8byte) (XX : Don't care)

Data Field							
D1	D2	D3	D4	D5	D6	D7	D8
ID	XX	XX	XX	XX	XX	XX	XX

- ID : Command ID = 16(0x10)

▶ Data field of response packet(16byte) (XX : Don't care)

Data Field															
D1	D2	D3	D4	D5	D6	D7	D8	D9	D10	D11	D12	D13	D14	D15	D16
ID	R1	XX	XX	XX	XX	XX	XX	XX	XX	XX	XX	XX	XX	XX	XX

- ID : Response ID = 16(0x10) <same as command ID>
- R1 : Refer to Section 3.6.16 Allowable Data Output Rate

3.6.16. **Allowable Data Output Rate**

▶ CAN Interface

Communication		Output Rate Parameter (Output rate, Hz)								
Baud-rate Parameter		0x00 (200)	0x01 (10)	0x02 (20)	0x03 (50)	0x04 (100)	0x05 (200)	0x06 (333)	0x07 (500)	0x08 (1000)
XX	1Mbps	O	O	O	O	O	O	O	O	O

- Baud-rate: 1Mbps (fixed, default)
- Default Output-rate: 0 (200Hz, default)

▶ UART Interface

Communication		Output Rate Parameter (Hz)								
Baud-rate Parameter		0 (200)	1 (10)	2 (20)	3 (50)	4 (100)	5 (200)	6 (333)	7 (500)	8 (1000)
0	115,200bps	O	O	O	O	O	O	O	X	X
1	921,600bps	O	O	O	O	O	O	O	O	O
2	460,800bps	O	O	O	O	O	O	O	O	X
3	230,400bps	O	O	O	O	O	O	O	O	X
4	115,200bps	O	O	O	O	O	O	O	X	X
5	57,600bps	O	O	O	O	O	O	X	X	X

- Default Baud-rate: 115,200bps
- Default Output-rate: 0 (200Hz, default)

3.6.17. **Set Bias**

▶ Receiving the command with set-bias, the sensor saves current output values as a reference and begins to send offset of the following output values from the reference.

▶ Receiving the command with un-bias, the sensor begins to send offset of the following output values from the factory bias which is a reference saved in a factory setting.

▶ Data field of command packet(8byte) (XX : Don't care)

Data Field							
D1	D2	D3	D4	D5	D6	D7	D8
ID	Bias parameter	XX	XX	XX	XX	XX	XX

- ID : Command ID = 17(0x11)
- Bias parameter 0(0x00): un-bias
- Bias parameter 1(0x01): set-bias

▶ Data field of response packet

- This command is not followed by any response packet.

3.6.18. **Read Count of Overload Occurrence**

▶ Data field of command packet(8byte) (XX : Don't care)

Data Field							
D1	D2	D3	D4	D5	D6	D7	D8
ID	XX	XX	XX	XX	XX	XX	XX

- ID : Command ID = 18(0x12)

▶ Data field of response packet(16byte) (XX : Don't care)

Data Field															
D1	D2	D3	D4	D5	D6	D7	D8	D9	D10	D11	D12	D13	D14	D15	D16
ID	R1	R2	R3	R4	R5	R6	XX	XX	XX	XX	XX	XX	XX	XX	XX

- ID : Response ID = 18(0x12) <same as command ID>
- R1 : Number of overload occurrence of Fx
- R2 : Number of overload occurrence of Fy
- R3 : Number of overload occurrence of Fz
- R4 : Number of overload occurrence of Tx
- R5 : Number of overload occurrence of Ty
- R6 : Number of overload occurrence of Tz
- Maximum count of overload occurrence: 255 (0xFF)

3.6.19. Error Codes

Error Code	Description
1(0x01)	Unsupported command
2(0x02)	Out of range error, a parameter such as ID, baud-rate, filter setting, (etc.) is out of the allowable range.
3(0x03)	Failed to set parameters

3.7. C Sample Code for Force & Torque Conversion

3.7.1. CAN Interface

```
unsigned char data_field[16]; // storage buffer for data field
//..... Received CAN data Save .....
// 8 byte data of can message id is #1 save in data_field [0] ~ [7]
// 8 byte data of can message id is #2 save in data_field [8] ~ [15]
// data field processing
short raw_data[6] = { 0 };
unsigned short temp;
unsigned DF=50, DT=2000; // DF, DT depend on the model, refer to 3.6.11
// response ID checking
if( (data_field[0] != 10) || (data_field[0] != 11) )
        return;

for (int idx = 0; idx < 6; idx++)
{
        temp = data_field [2 * idx + 1] * 256;
        temp += data_field [2 * idx + 2];
        raw_data[idx] = (signed short)temp; // variable casting
}

// Conversion from signed short data to float data and data scaling
// Set Force/Torque Original
float ft_array[6];
for (n = 0; n < 3; n++)
{
    ft_array[n] = (((float)raw_data[n] ) / DF);    // refer to 3.6.11
    ft_array[n + 3] = (((float)raw_data[n + 3] ) / DT); // refer to 3.6.11
}
// Overload status value
unsigned char overload_status = can_msg_data[13];
```

3.7.2. UART & Ethernet Interface

```
unsigned char uart_rx_buffer[100]; // receive buffer for UART & Ethernet communication
unsigned char data_field[16]; // storage buffer for data field
// check the SOP, EOP, Checksum of received UART data
// SOP == 0x55, EOP == 0xAA, Checksum == summation of each data in data_field

// Save the data field's data in data field buffer
for(int idx = 0; idx < 16; idx++)
        data_field[idx] = uart_rx_buffer[idx + 1]; //in case that rx_buffer[0] is SOP
// data field processing
short raw_data[6] = { 0 };
unsigned short temp;
unsigned DF=50, DT=2000; // DF, DT depend on the model, refer to 3.6.11
// response ID checking
if( (data_field[0] != 10) || (data_field[0] != 11) )
        return;

for (int idx = 0; idx < 6; idx++)
{
        temp = data_field [2 * idx + 1] * 256;
        temp += data_field [2 * idx + 2];
        raw_data[idx] = (signed short)temp; // casting process
}

// Conversion from signed short data to float data and data scaling
// Set Force/Torque Original
float ft_array[6];
for (n = 0; n < 3; n++)
{
    ft_array[n] = (((float)raw_data[n] ) / DF);
    ft_array[n + 3] = (((float)raw_data[n + 3] ) / DT);
}
// Overload status value
unsigned char overload_status = can_msg_data[13];
```

4. Product Specification

4.1. Performance specifications

Model	Dimensions		Weight	Data rate	Load capacity			Resolution		
	ø	H	w/o cable	Max.	Fx, Fy	Fz	Tx, Ty, Tz	Fx, Fy	Fz	Tx, Ty, Tz
	mm	mm	g	Hz	N	N	Nm	mN	mN	mNm
RFT80-6A03	80	33	322	1,000	1,000	1,000	50	200	200	10
RFT80-6A02	80	30	294	1,000	400	400	20	80	80	4
RFT80-6A01	80	22	226	1,000	400	400	20	100	100	5
RFT64-6A01	64	30	175	1,000	200	200	10	80	80	4
RFT64-SB01	64	20	140	1,000	150	200	4	150	200	5
RFT60-HA01	60	18.5	120	1,000	150	200	4	150	200	5
RFT44-SB12	44	20	70	200	100	150	2.5	200	200	8
RFT40-SA01	40	18.5	60	200	100	150	2.5	200	200	8

Resolution is the standard deviation of each six components of force and torque measured for 10 seconds, the measurement data passed through an internal 1st-order low pass filter with cutoff frequency of 100Hz.

Model	Dimensions		Hysteresis			Overload capacity				Crosstalk		
	ø	H	Fx, Fy	Fz	Tx, Ty, Tz	Fx, Fy	Fz+	Fz-	Tx, Ty, Tz	Fx, Fy	Fz	Tx, Ty, Tz
	mm	mm	%FS			%				%FS		
RFT80-6A03	80	33	2	2	2	300	300	300	300	3	3	3
RFT80-6A02	80	30	1	1.5	2	300	300	300	300	3	3	3
RFT80-6A01	80	22	2.5	1	1	150	200	400	200	3	3	3
RFT64-6A01	64	30	1	1.5	2	300	300	300	300	3	3	3
RFT64-SB01	64	20	3	2	2	150	150	300	150	3	3	3
RFT60-HA01	60	18.5	2.5	1	1	150	150	300	150	3	3	3
RFT44-SB12	44	20	2.5	1	3	150	150	300	150	3	3	3
RFT40-SA01	40	18.5	2	0.5	1	150	150	300	150	3	3	3

Fz+: tensile force, Fz-: compressive force.

4.2. Data output interface

RFT series support CAN, UART(RS232, RS422, USB, RS485), EtherCAT, Ethernet interfaces.

5. Product Ordering Information

RFT [ ] – [ ] – [ ] – [ ]

Sensor Feature

RFT80-6A03 = ø80mm, High Torque, Temp. compensation
RFT80-6A02 = ø80mm, High resolution, Temp. compensation
RFT80-6A01 = ø80mm, High resolution
RFT64-6A01 = ø64mm, High resolution, Temp. compensation
RFT64-SB01 = ø64mm, Dust seal
RFT60-HA01 = ø60mm, Hollow core
RFT44-SB01 = ø44mm, Dust seal
RFT40-SA01 = ø40mm, Solid core

Interface Method

A	=	CAN	
B	=	RS-232	
C	=	RS-422	
D	=	USB	
E	=	EtherCAT	(External board, e.g. RFTEC-02)
			(Embedded for RFT80-6A03, RFT80-6A02, RFT64-6A01)
E2	=	Ethernet	
F	=	RS-485	

Cable Option

" " = Default, Shielded, General signal cable, 2 meters
R3 = Shielded, Robot cable, 3 meters
R5 = Shielded, Robot cable, 5 meters

[Example] **RFT64-SB01-A:**

ROBOTOUS Force/Torque Sensor with Ø64mm Solid core, Dust seal, and CAN Interface

6. Contact Information (Technical Support)

- Homepage www.robotous.com
- Tel. +82-31-606-9918
- E-mail support@robotous.com
- Address Rm 402-1, B-dong, Bundang Techno Park, 723 Pangyo-ro, Bundang-gu, Seongnam-si, Gyeonggi-do 13516, KOREA

7. APPENDIX: Dimensions of RFT Series

- **RFT80-6A03**
- **RFT80-6A02**
- **RFT80-6A01**
- **RFT64-6A01**
- **RFT64-SB01**
- **RFT60-HA01**
- **RFT44-SB01**
- **RFT40-SA01**

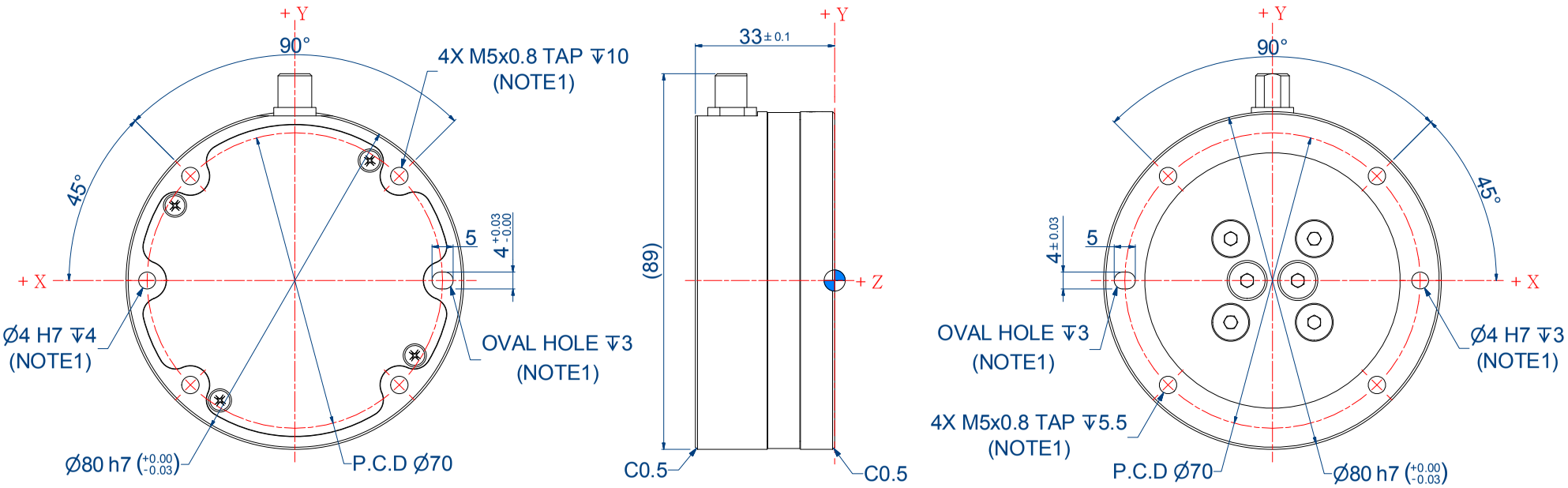

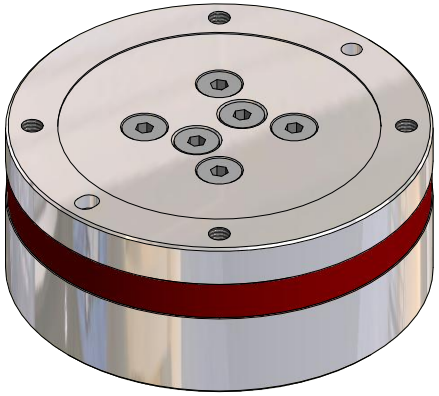

NOTES

1. Do not exceed interface depth, may cause damage.
2. Do not pull on a cable strongly.

DIMENSIONS
RFT80-6A03

PROJECTION	
DIMENSION	mm

ROBOTOUS
Advanced Technology for Human

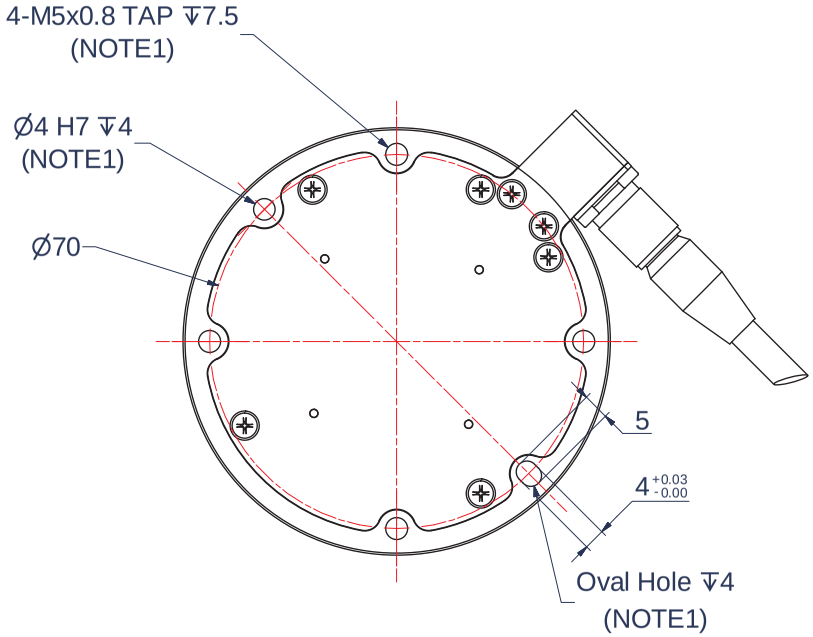

BOTTOM VIEW

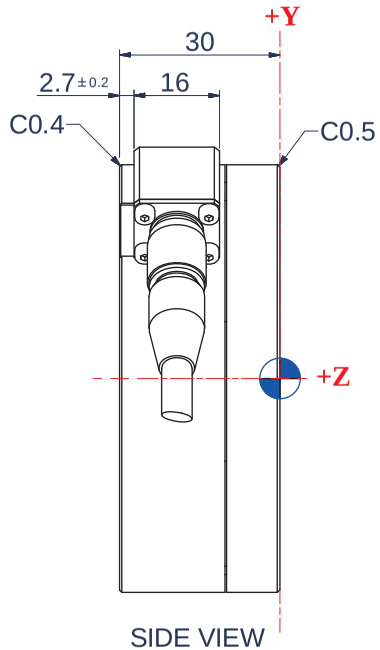

SIDE VIEW

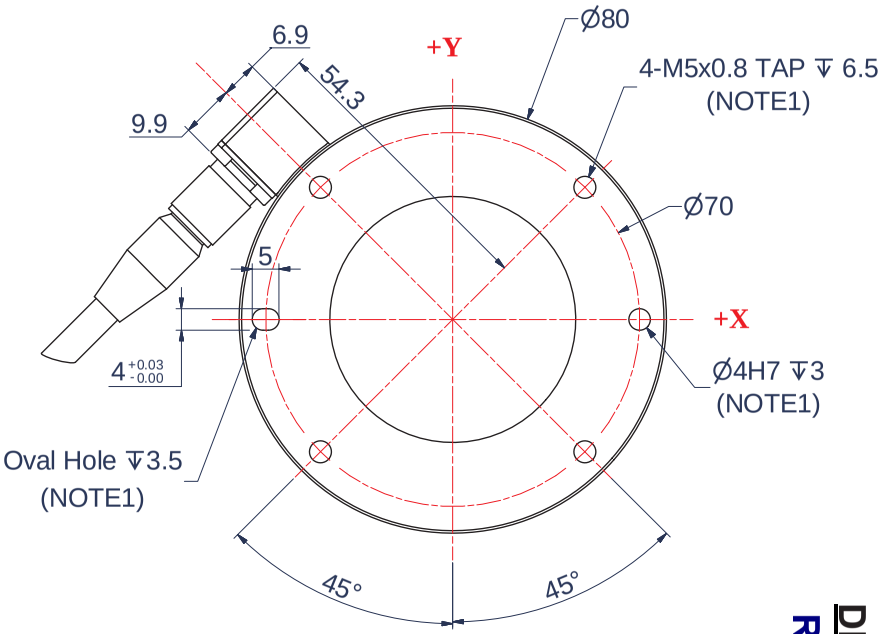

TOP VIEW

DIMENSIONS
RFT80-6A02

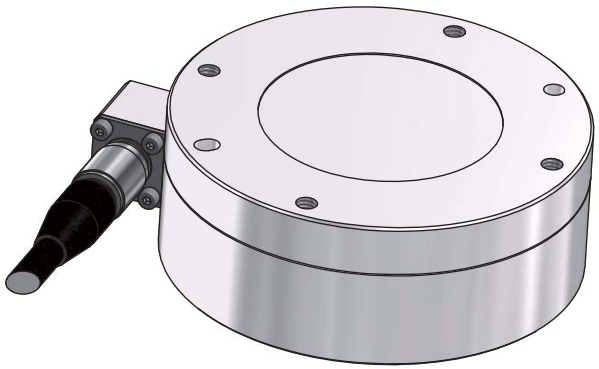

ISOMETRIC VIEW

NOTES

1. Do not exceed interface depth, may cause damage.
2. Do not pull on a cable strongly.
3.The housing has been grounded to protect it from external electric noise

PROJECTION	
DIMENSION	mm

ROBOTOUS
Advanced Technology for Human

DIMENSIONS
RFT80-6A01

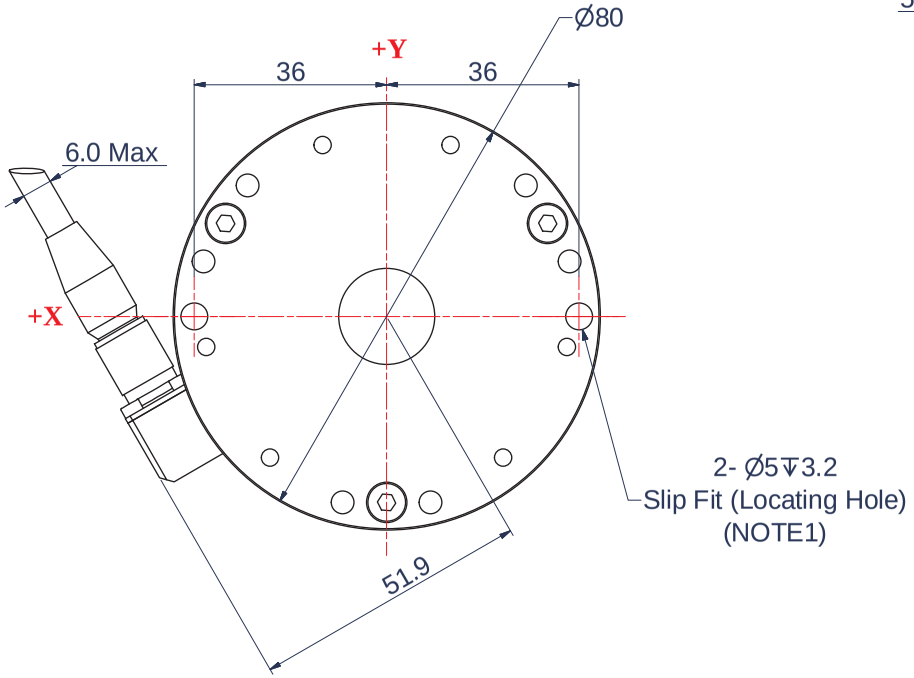

BOTTOM VIEW

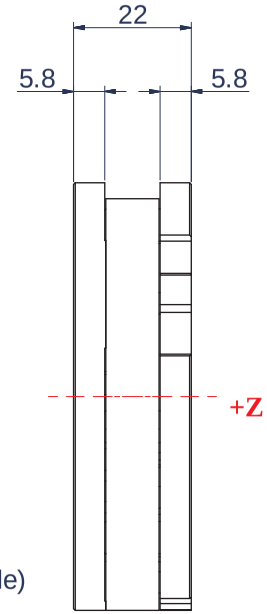

SIDE VIEW

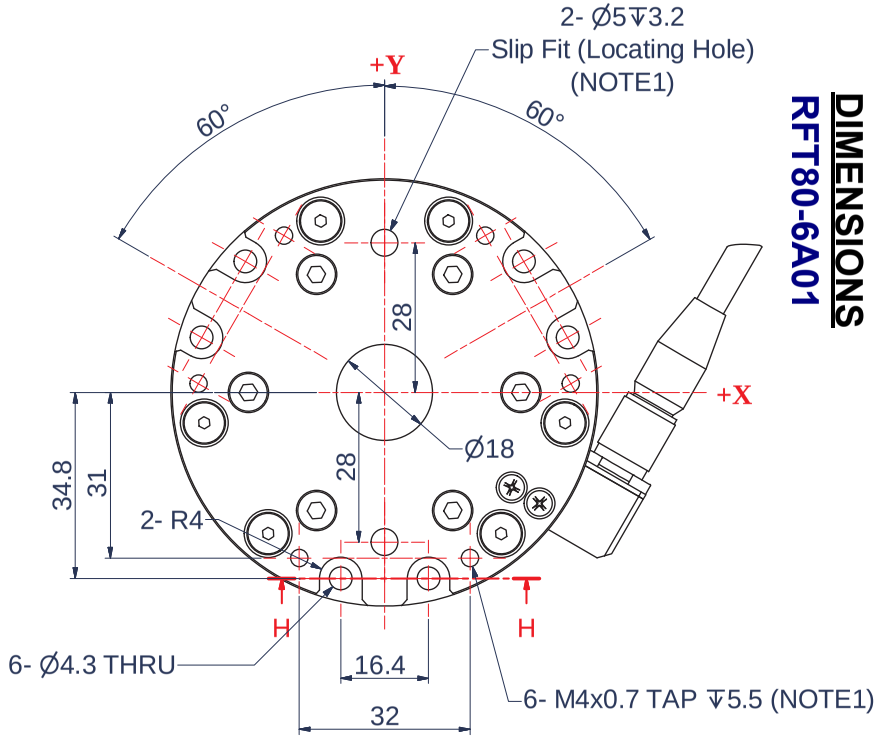

TOP VIEW

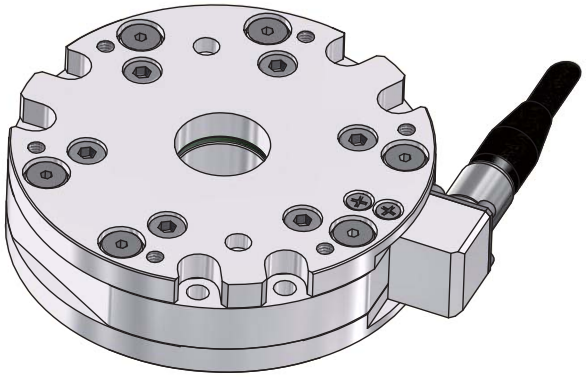

ISOMETRIC VIEW

H-H (1 : 1)

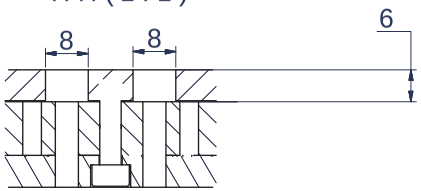

NOTES

1. Do not exceed interface depth, may cause damage.
2. Do not pull on a cable strongly.
3.The housing has been grounded to protect it from external electric noise

PROJECTION	
DIMENSION	mm

ROBOTOUS
Advanced Technology for Human

DIMENSIONS
RFT64-6A01

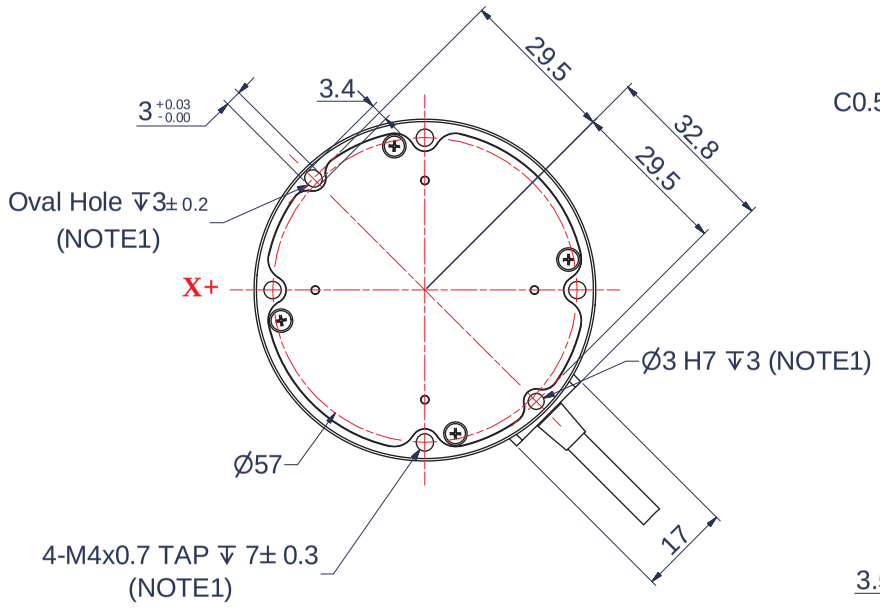

BOTTOM VIEW

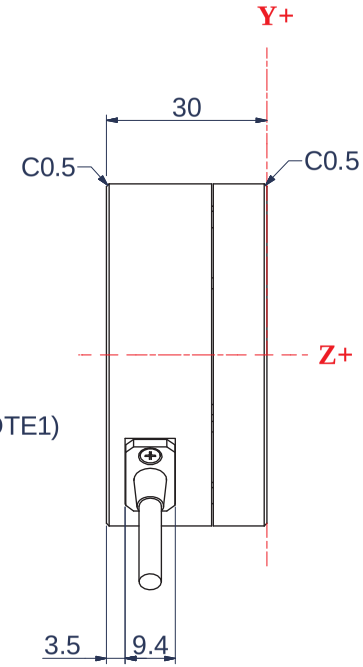

SIDE VIEW

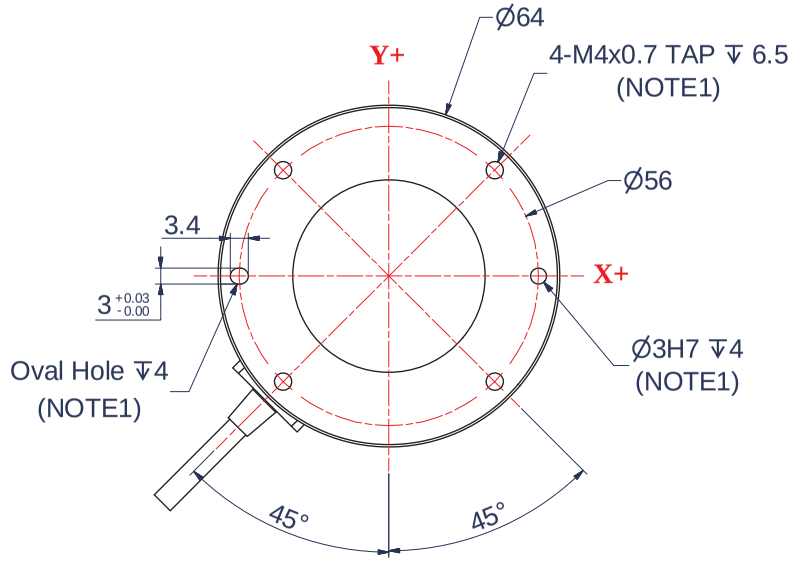

TOP VIEW

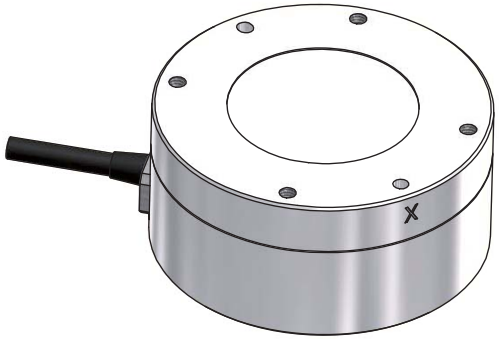

ISOMETRIC VIEW

NOTES

1. Do not exceed interface depth, may cause damage.
2. Do not pull on a cable strongly.
3.The housing has been grounded to protect it from external electric noise

PROJECTION	
DIMENSION	mm

ROBOTOUS
Advanced Technology for Human

DIMENSIONS
RFT64-SB01

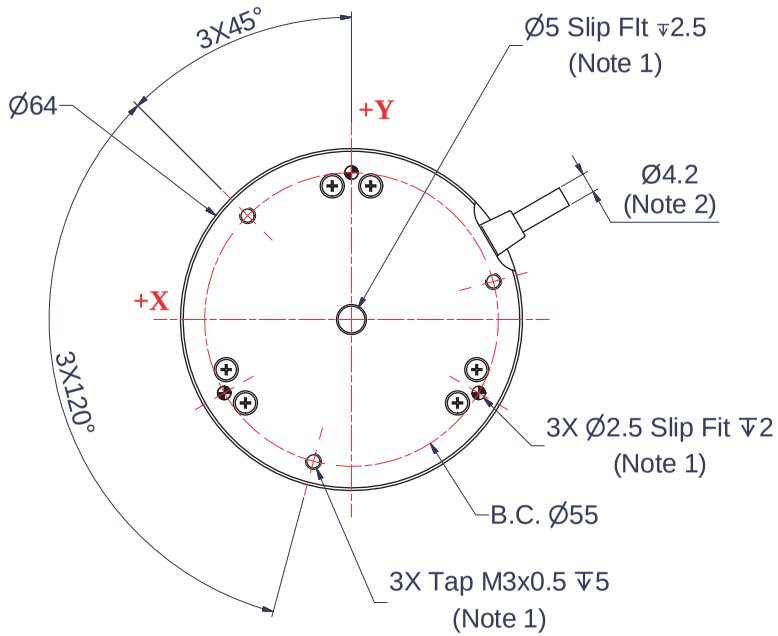

BOTTOM VIEW

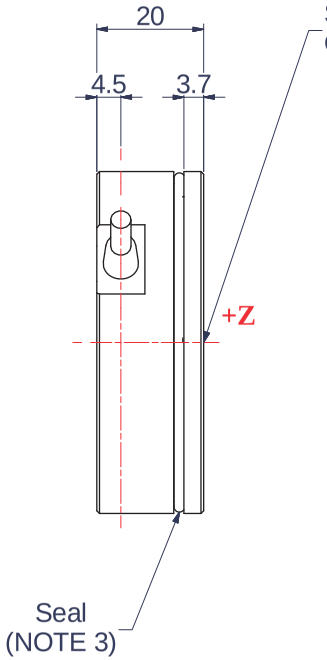

SIDE VIEW

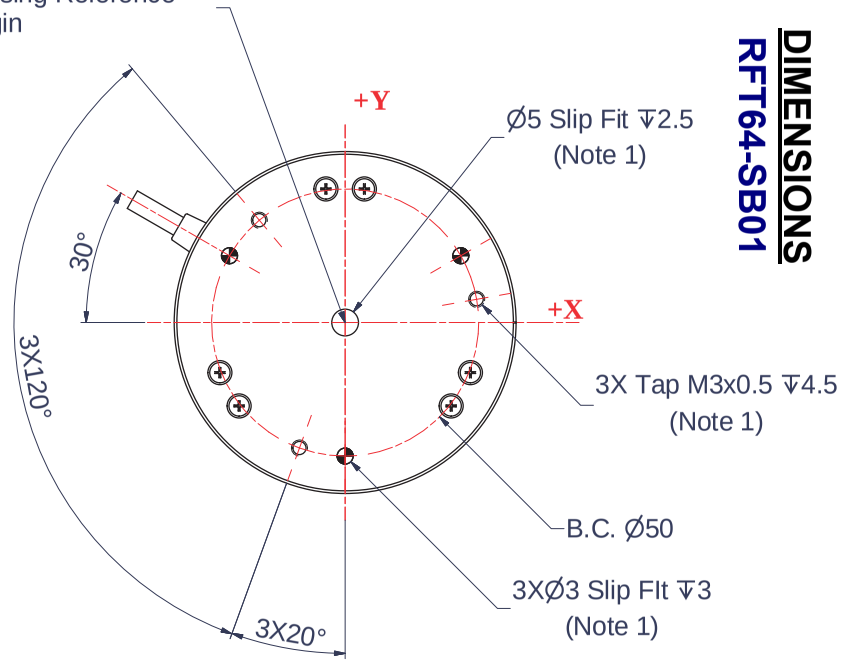

TOP VIEW

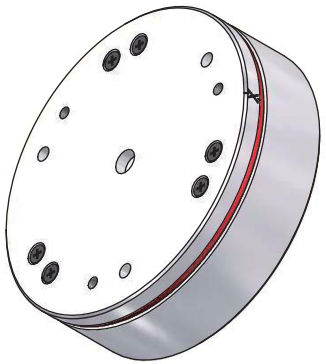

ISOMETRIC VIEW

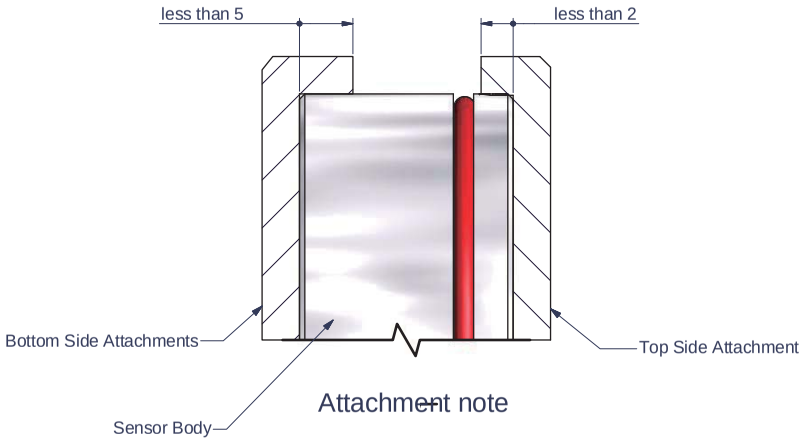

Attachment note

NOTES

1. Do not exceed interface depth, may cause damage.
2. Do not pull on a cable stronly.
3. Do not take off a seal
   If seal is taken off, sensor loses the characteristic
4.The housing has been grounded to protect it from external electric noise

PROJECTION	
DIMENSION	mm

ROBOTOUS
Advanced Technology for Human

DIMENSIONS
RFT60-HA01

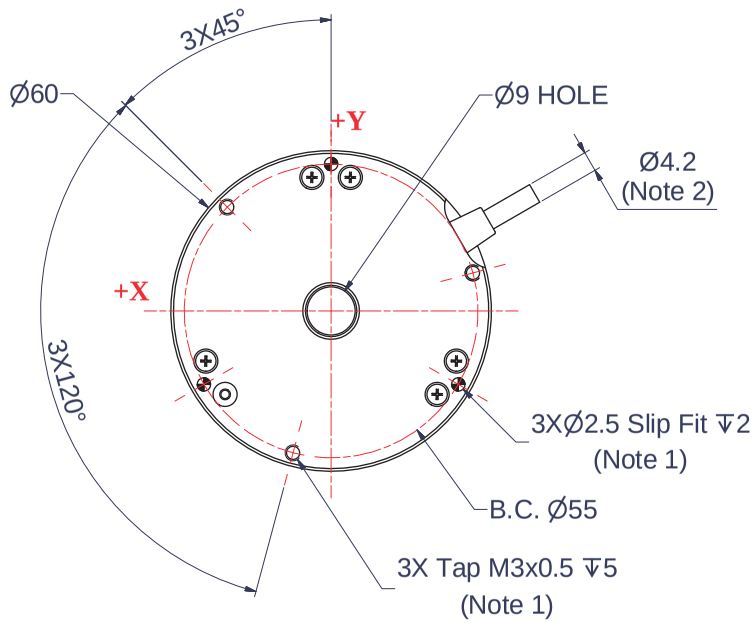

BOTTOM VIEW

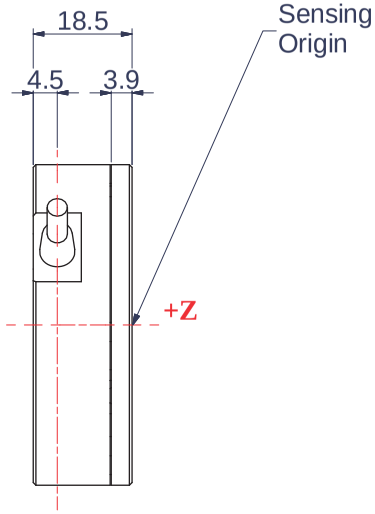

SIDE VIEW

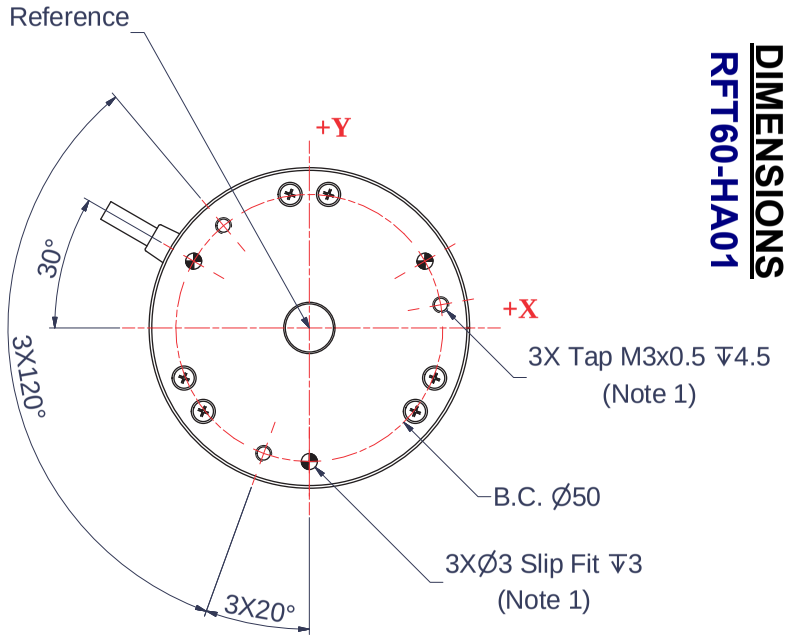

TOP VIEW

ISOMETRIC VIEW

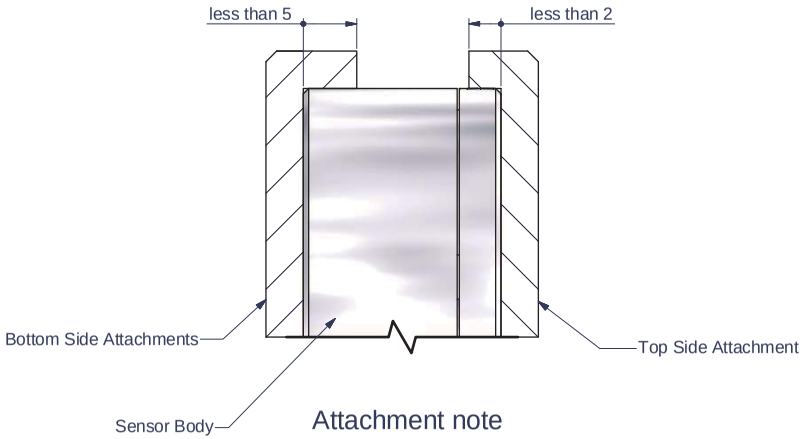

Attachment note

NOTES

1. Do not exceed interface depth, may cause damage.
2. Do not pull on a cable stronly.
3. The housing has been grounded to protect it from external electric noise

PROJECTION	
DIMENSION	mm

ROBOTOUS
Advanced Technology for Human

DIMENSIONS
RFT44-SB01

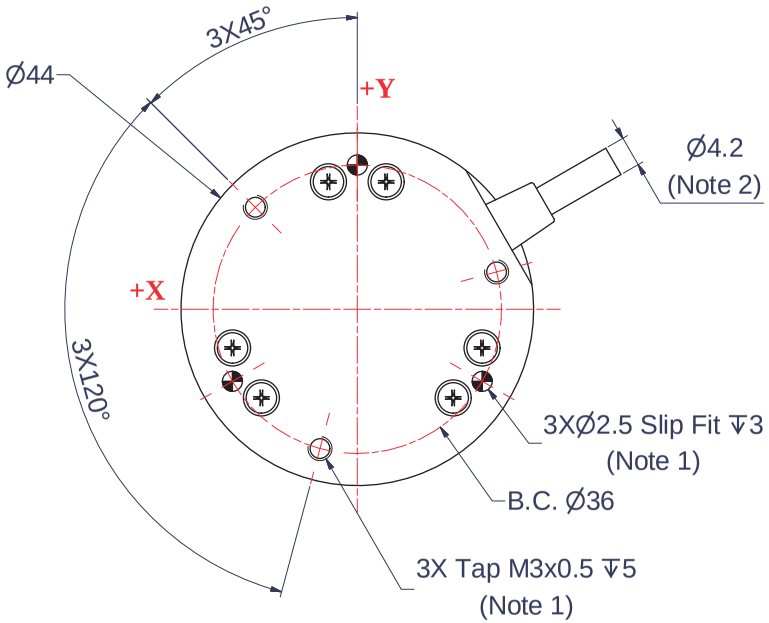

BOTTOM VIEW

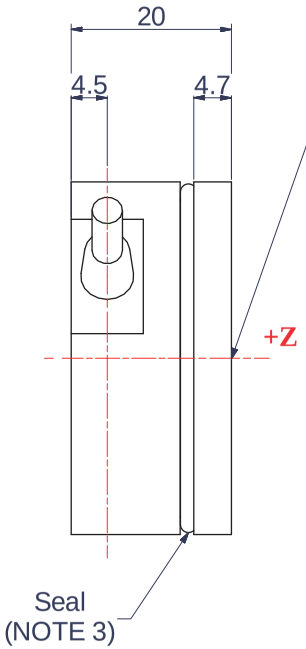

SIDE VIEW

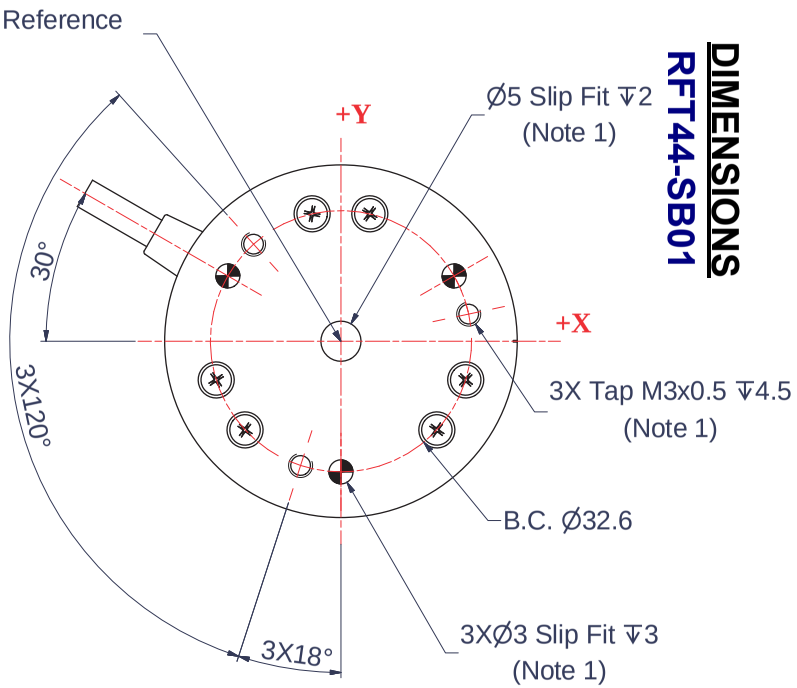

TOP VIEW

ISOMETRIC VIEW

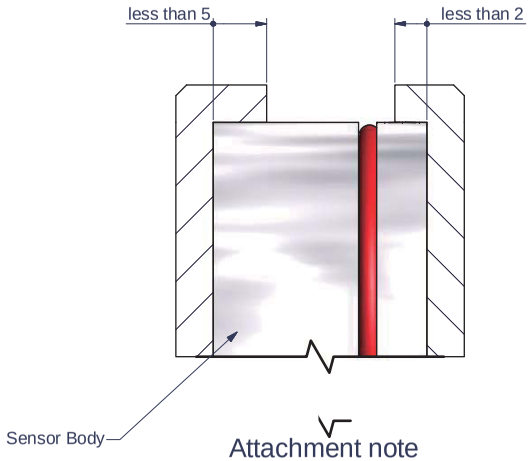

Attachment note

NOTES

1. Do not exceed interface depth, may cause damage.
2. Do not pull on a cable stronly.
3. Do not take off a seal
   If seal is taken off, sensor loses the characteristic
4.The housing has been grounded to protect it from external electric noise

PROJECTION	
DIMENSION	mm

ROBOTOUS
Advanced Technology for Human

DIMENSIONS
RFT40-SA01

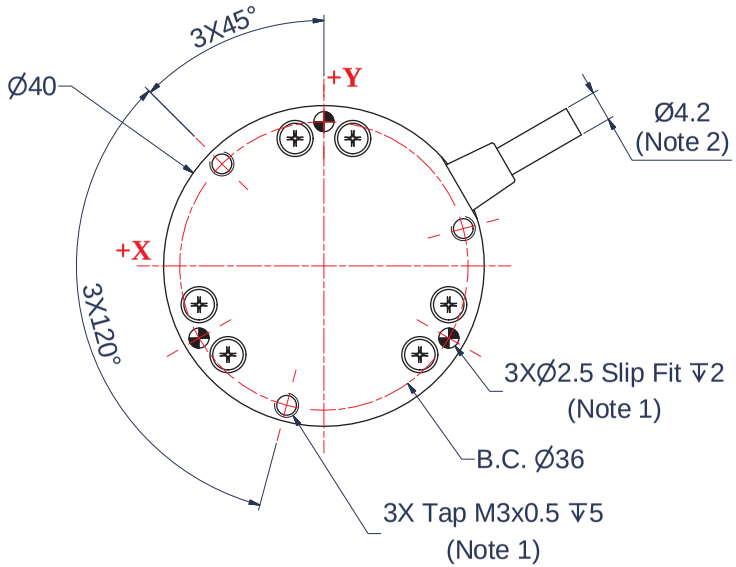

BOTTOM VIEW

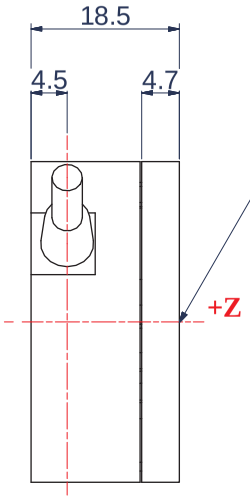

SIDE VIEW

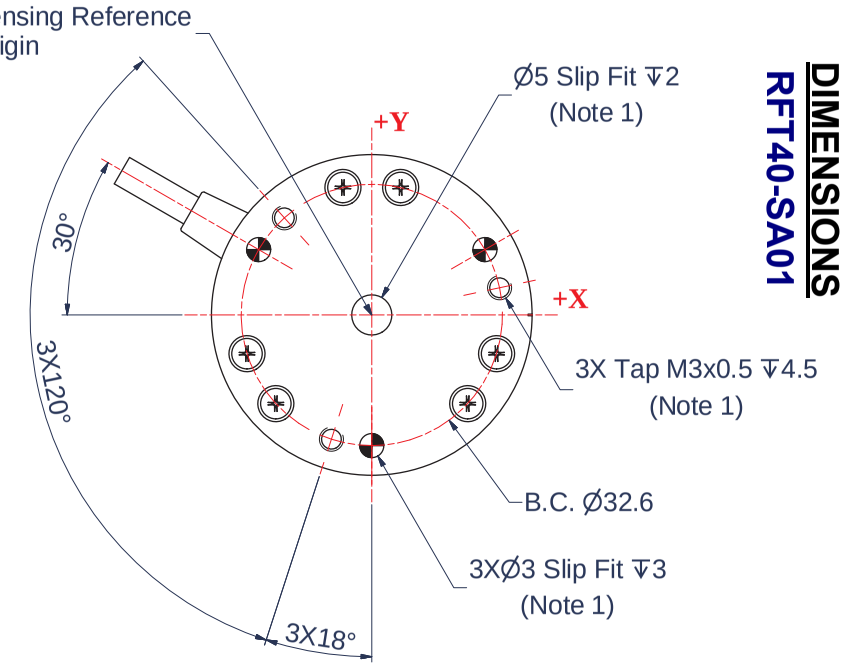

TOP VIEW

ISOMETRIC VIEW

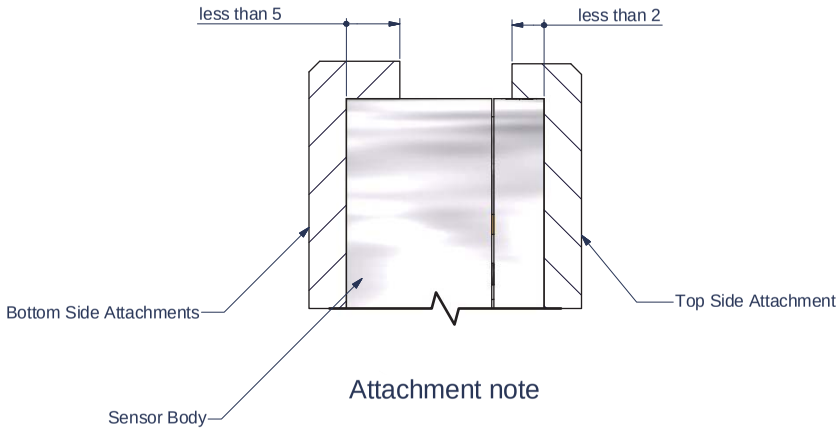

Attachment note

NOTES

1. Do not exceed interface depth, may cause damage.
2. Do not pull on a cable stronly.
3.The housing has been grounded to protect it from external electric noise

PROJECTION	
DIMENSION	mm

ROBOTOUS
Advanced Technology for Human